诚信 · 厚德 · 创新 · 共赢
Integrity, Virtue, Innovation, Win-Win

久泰真空
— JTVAC —

北京世纪久泰真空技术有限公司
Beijing Century Jiutai Vacuum Technology Co., Ltd.

山东世纪安泰真空设备有限公司
Shandong Century Antai Vacuum Equipment Co., Ltd.

地址：山东省滨州市滨城区高新区青田办事处
新八路高四路科技企业孵化器3号楼
电话：0543-2199385
传真：0543-2199385
网址：www.sjjtvac.com
邮箱：siitvacjt@163.com

ADD: Building 3, Gaosi Road, Technology Business Incubator,
Qingtian Office, High tech Zone, Bincheng District,
Binzhou City, Shandong Province, China
TEL: +86-543-2199385
FAX: +86-+543-2199385
Website: www.sjjtvac.com
E-mail: siitvacjt@163.com

高新技术企业
High-tech enterprises

久泰真空
— JTVAC —

专注真空科技 成就无限可能
Focusing on vacuum technology
Achieve infinite possibilities

www.sjjtvac.com

北京世纪久泰真空技术有限公司
Beijing Century Jiutai Vacuum Technology Co., Ltd.

山东世纪安泰真空设备有限公司
Shandong Century Antai Vacuum Equipment Co., Ltd.

15
15年行业经验
15 years of industry experience

20+
20多项专利
More than 20 patents

108
108个战略合作伙伴
108 strategic partners

26
26个销售省市及地区
26 sales provinces, cities, and regions

公司简介

北京世纪久泰真空技术有限公司成立于2011年，是一家集分子泵研发、生产、销售于一体的高新技术企业。2019年，公司在山东设立了新的生产基地--山东世纪安泰真空设备有限公司。

久泰真空专注于高真空获得设备领域，致力于为客户提供优质的真空解决方案。公司主要生产磁悬浮、脂润滑、油润滑、一体式、抗冲击式高真空分子泵及高真空机组等产品，产品广泛应用于航空航天、光伏、半导体、能源、军工、激光、家电、新材料、汽车等领域。

截止至2024年底，久泰真空依托先进的生产制造体系和严格的质量管理，年销售分子泵达3000台以上，总销量过超50000台，真空机组销量超过3000套，有效满足了市场的需求。同时，成熟的供应链管理确保了稳定的交付能力，进一步提升了市场份额。

久泰真空凭借卓越的产品质量和技术创新，在国内真空获得设备--分子泵行业占据30%以上的市场份额，稳居行业前列。我们以“诚信厚德、质量为本、创新领先、客户至上”的服务理念，赢得了广大客户的信赖。作为一家注重创新与发展的企业，北京世纪久泰真空技术有限公司始终以客户需求为核心，持续探索分子泵前沿技术，为客户提供卓越的真空应用解决方案。

COMPANY PROFILE

Beijing Century Jiutai Vacuum Technology Co., Ltd. was established in 2011 and is a high-tech enterprise that integrates the research and development, production, and sales of molecular pumps. In 2019, the company established a new production base in Shandong - Shandong Century Antai Vacuum Equipment Co., Ltd.

Jiutai Vacuum focuses on the field of high vacuum acquisition equipment and is committed to providing customers with high-quality vacuum solutions. The company mainly produces magnetic levitation, grease lubrication, oil lubrication, integrated and impact resistant high vacuum molecular pumps and high vacuum units. The products are widely used in aerospace, photovoltaics, semiconductors, energy, military, laser, home appliances, new materials, automobiles and other fields.

As of the end of 2024, Jiutai Vacuum relies on advanced production and manufacturing systems and strict quality management, with an annual sales volume of over 3000 molecular pumps and a total sales volume of over 50000 units. The sales volume of vacuum units exceeds 3000 sets, effectively meeting market demand. Meanwhile, mature supply chain management ensures stable delivery capabilities and further enhances market share.

Jiutai Vacuum, with excellent product quality and technological innovation, has gained over 30% market share in the equipment molecular pump industry in China, firmly ranking among the top in the industry. We have won the trust of our customers with our service philosophy of "integrity, integrity, quality, innovation leadership, and customer first". As an enterprise that focuses on innovation and development, Beijing Century Jiutai Vacuum Technology Co., Ltd. always takes customer needs as the core, continuously explores cutting-edge technologies of molecular pumps, and provides customers with excellent vacuum application solutions.

发展历程
Development History

15年行业经验
15 years of industry experience

2011
公司初创
“北京世纪久泰真空技术有限公司”正式成立，专注于真空分子泵及真空解决方案的研发与生产。

Company start-up
Beijing Century Jiutai Vacuum Technology Co., Ltd. has been officially established, focusing on the research and production of vacuum molecular pumps and vacuum solutions.

2016
布局华南，扩大销售
设立深圳办事处，进一步拓展华南市场，提升区域服务能力。

Layout in south china and expand sales
Establish a Shenzhen office to further expand the South China market and enhance regional service capabilities.

2019
生产基地建成
成立“山东世纪安泰真空设备有限公司”，完善生产布局，增强制造能力。

Construction of production base
Establish Shandong Century Antai Vacuum Equipment Co., Ltd. to improve production layout and enhance manufacturing capabilities.

2022
创新驱动未来
着手研发一体式真空分子泵和磁悬浮真空分子泵，开启技术创新与产品升级的新篇章。

Innovation drives the future
Embark on the research and development of integrated vacuum molecular pumps and magnetic levitation vacuum molecular pumps, opening a new chapter in technological innovation and jproduct upgrades.

2024
聚焦主业，夯实基础
磁悬浮真空分子泵和一体式真空分子泵正式上市，标志着公司在高端真空设备领域取得重大突破。

Focus on the main business and consolidate the foundation
The official launch of magnetic levitation vacuum molecular pumps and integrated vacuum molecular pumps marks a significant breakthrough for the company in the field of high-end vacuum equipment.

2025
立足实业，展望未来
开拓新产业线，扩大产品矩阵；同时积极开拓国内外市场，提升品牌影响力。

Based on industry, looking forward to the future
Explore new industrial lines and expand the product matrix; At the same time, actively exploring domestic and international markets to enhance brand influence.

一体系列分子泵
INTEGRATED SERIES MOLECULAR PUMP

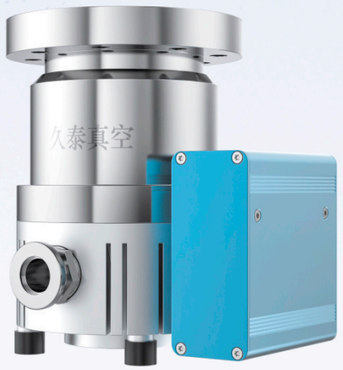

JTFB-80C

JTFB-80C

JTFB-300Y

JTFB-300Y

■ 概述 / Pumping speed curve

一体式分子泵将控制器与泵体集成，安装和维护更加便捷。泵体和控制器经过精密平衡设计，运行更平稳。采用减震材料和结构，进一步降低振动和噪音。采用紧凑设计，大幅简化接线和安装过程，适合空间有限的应用场景。

The integrated molecular pump integrates the controller with the pump body, making installation and maintenance more convenient. The pump body and controller are designed with precise balance, ensuring smoother operation. Adopting shock-absorbing materials and structures to further reduce vibration and noise. Adopting a compact design, greatly simplifying the wiring and installation process, suitable for applications with limited space

■ 抽速曲线 / Pumping speed curve

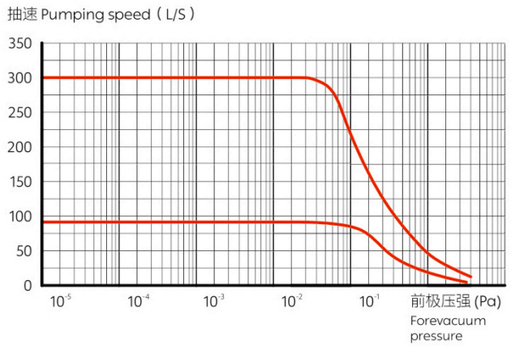

■ JTFB-80C 安装尺寸 / Installation dimensions

单位 / Unit : mm

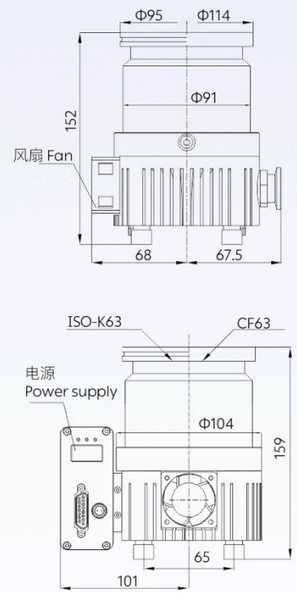

■ JTFB-300Y 安装尺寸 / Installation dimensions

单位 / Unit : mm

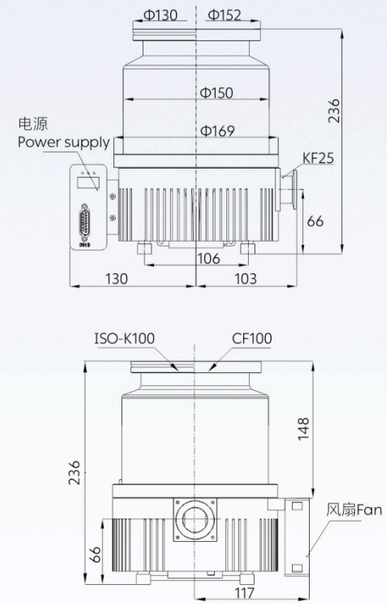

■技术参数 / Technical Specifications

型号	MOTER		JTFB-80C		JTFB-300Y	
进气口法兰	Inlet flange		CF63	ISO-K63	CF100	ISO-K100
排气口法兰	Exhaust flange		KF16		KF25	
抽速	Pumping speed		80 L/S		300 L/S	
压缩比	Compression ratio	N_2	$>1\times10^{8}$			
		H_2	$>1\times10^{3}$			
极限压强	Ultimate pressure		2×10^{-6} Pa		3×10^{-7} Pa	6×10^{-7} Pa
电机转数	Motor speed		60000 rpm		33000 rpm	
轴承	bearing		复合式永磁轴承 / Composite permanent magnet bearing		脂润滑陶瓷轴承 / Lubricated ceramic bearings with grease	
振动值	Vibration value		≤ 0.1 um			
启动时间	Startup time		< 2 min		< 4 min	
建议采用的前级泵	Suggested front-end pump		0.5-2 L/S		2 L/S	
冷却方式	Cooling method		水冷 (Water cooled) / 风冷 (Air cooled)			
安装方向	Installation direction		任意角度 / Any angle			
泵重量	Pump weight		≈ 4.7 Kg	≈ 2.5 Kg	≈ 12 Kg	

型号	MOTER	单位 / UNIT	JTFB-80C	JTFB-300Y
全功率输入电压范围	Full power input voltage range	V	24VDC	
额定功率	Rated power	W	80	200
峰值功率	Peak power	W	100 (10s)	300 (10s)
控制接口	Control interface		RS485	
输出频率范围	Output frequency range	Hz	0 ~ 1000	0 ~ 550
保护功能	Protection function		控制器过温、马达过温、过载、短路、过流、过压等 Controller overheating, motor overheating, overload, short circuit, overcurrent, overvoltage, etc	

一体系列分子泵
INTEGRATED SERIES MOLECULAR PUMP

JTFB-700Y

JTFB-1300Y

JTFB-2000Y

■ 抽速曲线 / Pumping speed curve

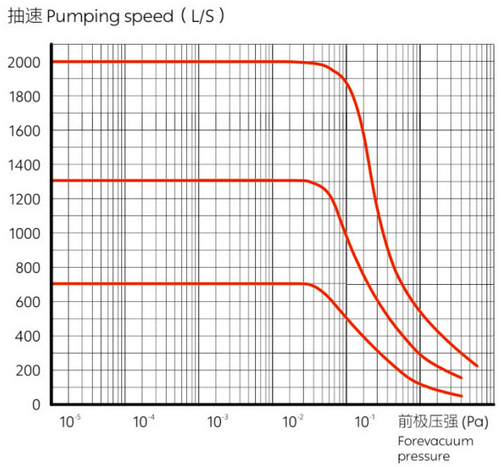

■ 安装尺寸 / Installation dimensions

单位 / Unit : mm

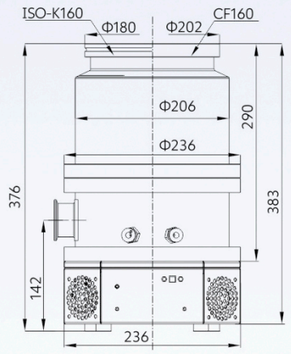

JTFB-700Y

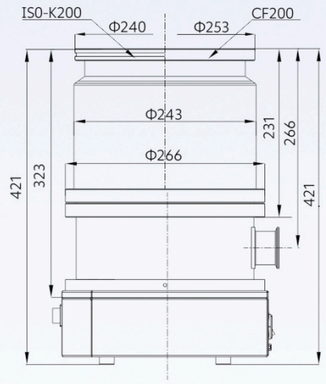

JTFB-1300Y

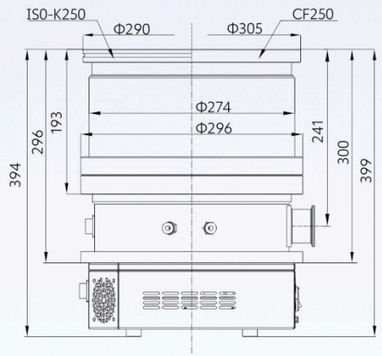

JTFB-2000Y

■技术参数 / Technical Specifications

型号	MOTER		单位 / UNIT	JTFB-700Y		JTFB-1300Y		JTFB-2000Y	
进气口法兰	Inlet flange			CF160	ISO-K160	CF200	ISO-K200	CF250	ISO-K250
排气口法兰	Exhaust flange			KF40					
抽速	Pumping speed		L/S	700		1300		2000	
压缩比	Compression ratio	N_2		$>1\times10^{9}$					
		H_2		$>1\times10^{3}$					
极限压强	Ultimate pressure		Pa	1.2×10^{-7}	5×10^{-7}	1.2×10^{-7}	5×10^{-7}	1.2×10^{-7}	5×10^{-7}
电机转数	Motor speed		rmp	27000		24000			
轴承	bearing			脂润滑陶瓷轴承 / Lubricated ceramic bearings with grease					
振动值	Vibration value		um	≤ 0.1					
启动时间	Startup time		min	< 4.5		< 5		< 6	
建议采用的前级泵	Suggested front-end pump		L/S	4-8		8-15		15	
冷却方式	Cooling method			水冷 / Water cooled					
安装方向	Installation direction			任意角度 / Any angle					
泵重量	Pump weight		Kg	≈ 24		≈ 34		≈ 36	
全功率输入电压范围	Full power input voltage range		V	220AC					
额定功率	Rated power		W	300		700			
峰值功率	Peak power		W	500 (10s)		700 (10s)			
控制接口	Control interface			RS485					
输出频率范围	Output frequency range		Hz	0 ~ 450		0 ~ 400			
保护功能	Protection function			控制器过温、马达过温、过载、短路、过流、过压等 Controller overheating, motor overheating, overload, short circuit, overcurrent, overvoltage, etc					

油润滑系列分子泵
OIL LUBRICATION SERIES MOLECULAR PUMP

JTFB-600
风冷
Air cooled

JTFB-1200
风冷
Air cooled

JTFB-1600
风冷
Air cooled

JTFB-600
水冷
Water cooled

JTFB-1200
水冷
Water cooled

JTFB-1600
水冷
Water cooled

■ 概述 / Pumping speed curve

油润滑系列分子泵采用特种真空油作为润滑介质，油润滑系统能够有效减少轴承和运动部件的摩擦和磨损，延长泵的使用寿命。在高负载或长时间运行的情况下，油润滑分子泵仍能保持稳定的性能。

The oil lubrication series molecular pump uses special vacuum oil as the lubrication medium. The oil lubrication system can effectively reduce the friction and wear of bearings and moving parts, and extend the service life of the pump. Under high load or long-term operation, the oil lubricated molecular pump can still maintain stable performance.

■ 抽速曲线 / Pumping Speed Curve

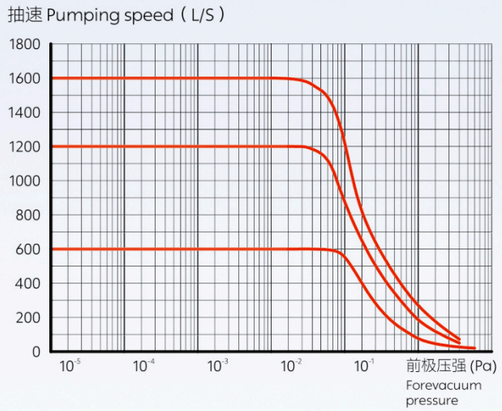

■安装尺寸 / Installation Dimensions

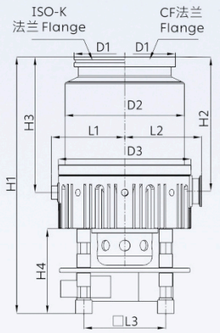

风冷 / Air cooling

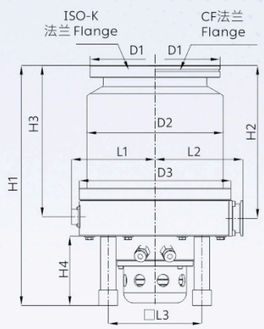

水冷 / Water cooling

■尺寸参数 / Dimensional Parameters

单位 / Unit : mm

型号 / MOTER	水冷 / Water cooling						风冷 / Air cooling					
	JTFB-600		JTFB-1200		JTFB-1600		JTFB-600		JTFB-1200		JTFB-1600	
高真空法兰 High vacuum flange	CF160	ISO-K160	CF200	ISO-K200	CF250	ISO-K250	CF160	ISO-K160	CF200	ISO-K200	CF250	ISO-K250
D1	Φ202	Φ180	Φ253	Φ240	Φ 305	Φ290	Φ202	Φ180	Φ253	Φ240	Φ305	Φ290
D2	Φ212	Φ212	Φ243	Φ243	Φ274	Φ274	Φ212	Φ212	Φ243	Φ243	Φ274	Φ274
D3	Φ236	Φ236	Φ266	Φ266	Φ296	Φ296	Φ236	Φ236	Φ266	Φ266	Φ296	Φ296
H1	375	374	403	405	393	393	455	455	475	475	468	465
H2	235	236	262	265	250	250	237	238	260	262	253	250
H3	238	239	262	265	250	250	239	240	267	265	253	250
H4	108	108	113	113	110	110	151	151	151	151	153	153
L1	130	130	145	145	160	160	130	130	145	145	160	160
L2	137	137	152	152	166	166	137	137	152	152	166	166
L3	146	146	168	168	184	184	146	146	168	168	184	184

■技术参数 / Technical Specifications

型号	MOTER		单位 / UNIT	JTFB-600		JTFB-1200		JTFB-1600	
进气口法兰	Inlet flange			CF160	ISO-K160	CF200	ISO-K200	CF250	ISO-K250
排气口法兰	Exhaust flange			KF40				KF50	
抽速	Pumping speed		L/S	600		1200		1600	
压缩比	Compression ratio	N_2		$>1\times10^{9}$					
		H_2		$>1\times10^{3}$					
极限压强	Ultimate pressure		Pa	1.2×10^{-7}	5×10^{-7}	1.2×10^{-7}	5×10^{-7}	1.2×10^{-7}	5×10^{-7}
电机转数	Motor speed		rmp	27000 / 24000 风冷 (Air cooling)					
振动值	vibration value		um	≤ 0.1				≤ 0.1	
启动时间	Startup time		min	< 4.5		< 5		< 6	
建议采用的前级泵	Suggested front-end pump		L/S	4-8		8-15		15	
冷却方式	Cooling method			水冷 (Water cooled) / 风冷 (Air cooled)					
电源电压	Power supply voltage		V	220AC					
额定功率	Rated power		W	500					
安装方向	Installation direction			垂直 (Vertical) ±5°					
泵重量	Pump weight		Kg	≈25		≈33		≈38	

脂润滑系列分子泵
LUBRICATION SERIES MOLECULAR PUMP

JTFB-650Z
风冷
Air cooled

JTFB-1300Z
风冷
Air cooled

JTFB-2000Z
风冷
Air cooled

JTFB-650Z
水冷
Water cooled

JTFB-1300Z
水冷
Water cooled

JTFB-2000Z
水冷
Water cooled

■ 概述 / Pumping speed curve

脂润滑系列分子泵的轴承采用脂润滑陶瓷精密轴承，可实现泵体的任意角度安装。与传统油润滑分子泵相比，脂润滑分子泵减少了油雾污染风险并能在一定范围的温湿度条件下稳定运行，适用于工业、科研及半导体等领域的中高真空需求。

The bearings of the grease lubricated series molecular pump adopt grease lubricated ceramic precision bearings, which can be installed at any angle of the pump body. Compared with traditional oil lubricated molecular pumps, grease lubricated molecular pumps reduce the risk of oil mist pollution and can operate stably under a certain range of temperature and humidity conditions, making them suitable for medium to high vacuum requirements in industrial, scientific research, and semiconductor fields.

■ 抽速曲线 / Pumping speed curve

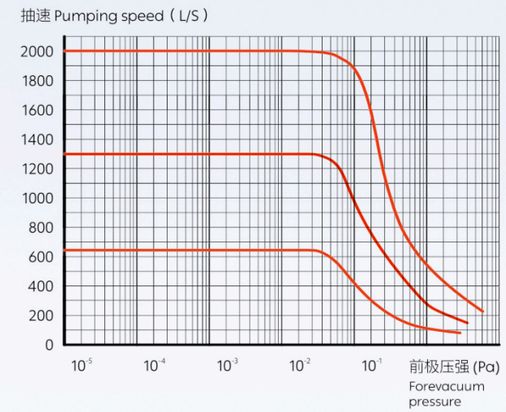

■ JTFB-650Z 安装尺寸 / Installation dimensions

单位 / Unit : mm

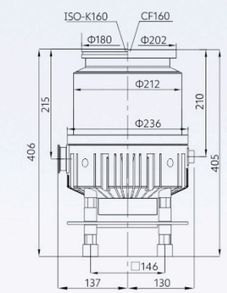

风冷 / Air cooling

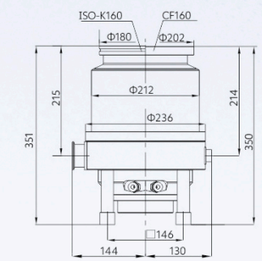

水冷 / Water cooling

■ JTFB-1300Z 安装尺寸 / Installation dimensions

单位 / Unit : mm

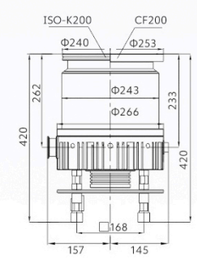

风冷 / Air cooling

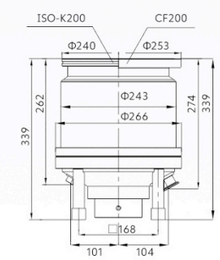

水冷 / Water cooling

■ JTFB-2000Z 安装尺寸 / Installation dimensions

单位 / Unit : mm

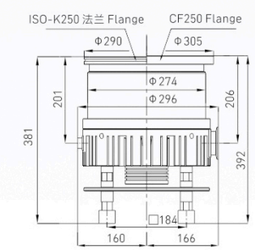

风冷 / Air cooling

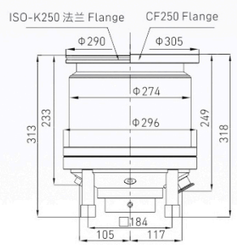

水冷 / Water cooling

■技术参数 / Technical Specifications

型号	MOTER		单位 / UNIT	JTFB-650Z		JTFB-1300Z		JTFB-2000Z	
进气口法兰	Inlet flange			CF160	ISO-K160	CF200	ISO-K200	CF250	ISO-K250
排气口法兰	Exhaust flange			KF40				KF50	
抽速	Pumping speed		L/S	650		1300		2000	
压缩比	Compression ratio	N_2		>1×10⁹					
		H_2		>1×10³					
极限压强	Ultimate pressure		Pa	1.2×10^{-7}	5×10^{-7}	1.2×10^{-7}	5×10^{-7}	1.2×10^{-7}	5×10^{-7}
电机转数	Motor speed		rmp	24000					
轴承	Bearing			脂润滑陶瓷轴承 / Lubricated ceramic bearings with grease					
振动值	Vibration value		um	≤ 0.1					
启动时间	Startup time		min	< 4.5		< 5		< 6	
建议采用的前级泵	Suggested front-end pump		L/S	4-8		8-15		15	
冷却方式	Cooling method			水冷 (Water cooled) / 风冷 (Air cooled)					
电源电压	Power supply voltage		V	220AC					
额定功率	Rated power		W	500					
安装方向	Installation direction			任意角度 Any angle					
泵重量	Pump weight		Kg	≈ 24		≈ 29		≈ 31	

抗冲击系列分子泵
IMPACT RESISTANT SERIES MOLECULAR PUMP

JTFB-4200

JTFB-4500

■ 概述 / Pumping speed curve

抗冲击系列分子泵专为在冲击、振动和复杂环境下稳定工作而设计。通过优化转子、轴承和结构，具有更强的抗冲击性、更高的可靠性和更广泛的环境适应性，能够在高加速度、频繁启停或极端温度下保持高效运行，广泛应用于航究航天、工业设备等动态环境。

The anti impact series molecular pump is designed for stable operation in impact, vibration, and complex environments. By optimizing the rotor, bearings, and structure, it has stronger impact resistance, higher reliability, and wider environmental adaptability, and can maintain efficient operation under high acceleration, frequent start stop, or extreme temperatures. It is widely used in dynamic environments such as aerospace and industrial equipment.

■ 抽速曲线 / Pumping speed curve

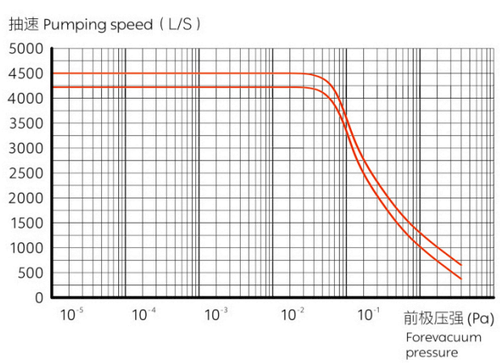

■ 安装尺寸 / Installation dimensions

单位 / Unit : mm

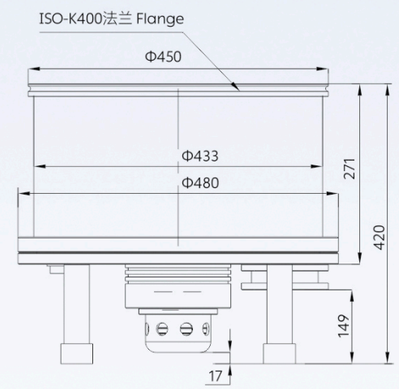

JTFB-4200

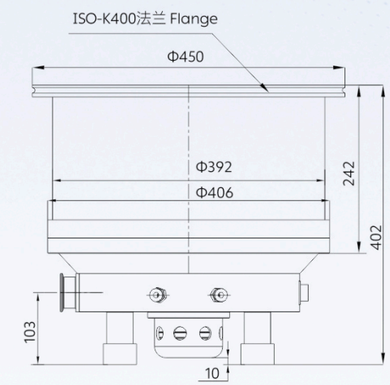

JTFB-4500

■技术参数 / Technical Specifications

型号	MOTER		单位 / UNIT	JTFB-4200	JTFB-4500
进气口法兰	Inlet flange			ISO-K400	ISO-K400
排气口法兰	Exhaust flange			ISO-K100	KF40
抽速	Pumping speed		L/S	4200	4500
压缩比	Compression ratio	N_2		$>1\times10^{8}$	$>1\times10^{8}$
		H_2		$>5\times10^{2}$	$>5\times10^{2}$
极限压强	Ultimate pressure		Pa	7×10^{-7}	7×10^{-7}
电机转数	Motor speed		rmp	15000	18000
振动值	Vibration value		um	≤ 0.15	
启动时间	Startup time		min	< 18	
建议采用的前级泵	Suggested front-end pump		L/S	30-70	
冷却方式	Cooling method			水冷 / Water cooled	
冷却水温度	Cooling water temperature		℃	≤ 25	
冷却水流量	Cooling water flow rate		L/min	2	
电源电压	Power supply voltage		V	220AC	
额定功率	Rated power		W	1000	
安装方向	Installation direction			垂直 Vertical ±5°	
泵重量	Pump weight		kg	≈ 100	

高真空排气机组 (标准机组)

HIGH VACUUM EXHAUST UNIT (STANDARD UNIT)

80系列触摸屏机组
80 series touch screen unit

300系列触摸屏机组
300 series touch screen unit

600系列触摸屏机组
600 series touch screen unit

300系列标准机组
300 series standard unit

600系列标准机组
600 series standard unit

600系列标准机组
600 series standard unit

600 / 1200系列封闭式机组
600 / 1200 series closed unit

1200 / 1600系列封闭式机组
1200 / 1600 series closed unit

■ 概述 / Overview

久泰真空高真空排气机组为了适应真空应用市场需求而设计制造，整机简洁美观、性能优良、操作简单、维护方便。

Jiutai vacuum high vacuum exhaust unit is designed and manufactured to meet the market demand for vacuum applications. The whole machine is simple, beautiful, with excellent performance, easy operation, and convenient maintenance.

■ 设备特点与技术指标 / Equipment Characteristics And Technical Specifications

◆ 真空获得设备为分子泵+机械泵，设备真空度在分子泵运转至额定转速后优于$8x10^{-4}$Pa；30分钟以内优于$1x10^{-4}$Pa；极限直空$5×10^{-6}$Pa。
◆ 机组为可移位台式小车结构，能够满足不同位置排气的需要。
◆ 为缩短了排气时间，有效提高工作效率，机组可配备预抽排气系统，可在分子泵不停机的状态下实现换工件、预抽真空、抽高真空的排气流程

◆ The vacuum acquisition equipment is a molecular pump+mechanical pump, and the vacuum degree of the equipment is better than $8x10^{-4}$Pa after the molecular pump runs to the rated speed; Better than $1x10^{-4}$Pa within 30 minutes; Ultimate straight air pressure of $5x10^{-6}$Pa.
◆ The unit is a movable desktop trolley structure that can meet the exhaust needs of different positions.
◆ To shorten the exhaust time and effectively improve work efficiency, the unit can be equipped with a pre pumping exhaust system, which can realize the exhaust process of workpiece replacement, pre pumping vacuum, and high vacuum pumping without stopping the pump

■ 标准机组技术参数 / Standard Unit Technical Parameters

型号 / MOTER	单位 / UNIT	80系列机组 80 Series Unit	300系列机组 300 Series Unit	600系列机组 600 Series Unit	1200系列机组 1200 Series Unit	1600系列机组 1600 Series Unit
进气口法兰 Inlet flange		DN25	DN25 / DN40	DN40		
抽气速率 Pumping speed	L/S	80	300	600	1200	1600
出厂指标 Factory indicators	Pa	$1×10^{-5}$				
前级泵抽速 Front stage pump pumping speed	L/S	0.5	2	4-8	8-15	15
冷却方式 Cooling method		水冷 / 风冷 Water cooled / Air cooled				
输入电源 Input power	V/Hz	220 / 50				380 / 50
结构 Structure		便携台式 Portable desktop	移位台式小车 Mobile desktop car			

久泰真空机组均采用本公司自主研发的分子泵作为主泵。前级泵可根据用户需求，灵活选配干泵或油泵等真空泵，阀门及其他附件亦可按需调整，以此确保整个系统的适用性与可靠性。

Jiutai vacuum units all use our company's independently developed molecular pump as the main pump. The front-end pump can be flexibly selected with vacuum pumps such as dry pumps or oil pumps according to user needs. Valves and other accessories can also be adjusted as needed to ensure the applicability and reliability of the entire system.

高真空排气机组 (非标定制)

HIGH VACUUM EXHAUST UNIT (CUSTOMIZED NON-STANDARD)

■ 概述 / Overview

久泰真空专注于高真空技术领域，提供高真空排气机组的非标定制服务。根据客户的工要求、使用环境和真空指标，灵活配置分子泵、前级泵(干泵、旋片泵、罗茨泵等)、电系统和真空阀门管路、实现高效、可靠、智能化的真空抽气解决方案。

Jiutai Vacuum focuses on the field of high vacuum technology and provides non-standard customized services for high vacuum exhaust units. According to the customer's work requirements, usage environment, and vacuum indicators, flexibly configure molecular pumps, front-end pumps (dry pumps, rotary vane pumps, Roots pumps, etc.), electrical systems, and vacuum valve pipelines to achieve efficient, reliable, and intelligent vacuum pumping solutions.

■ 定制流程 / Customization Process

01 根据客户具体需求，量身定制真空解决方案确保系统高效、可靠，确保方案在最短时间内交付。

Tailored vacuum solutions based on specific customer needs to ensure efficient and reliable system delivery in the shortest possible time.

02 作为分子泵的生产工厂，我们掌握核心技术可确保核心的可靠性。与上下游优质供应商紧密合作，可设备确保配套设备 (如干泵罗茨泵、真空计等) 的高质量和快交付。

As a production factory of molecular pumps, our mastery of core technology ensures the reliability of the core. Close cooperation with high-quality suppliers upstream and downstream ensures high-quality and fast delivery of supporting equipment (such as dry pumps, Roots pumps, vacuum gauges, etc.)

03 经验丰富的工程师团队，确保安装过程高效、精准。设备出厂前通过多环节测试，确保系统性能达到最优状态。

Experienced engineering team ensures efficient and precise installation process. The equipment undergoes multiple tests before leaving the factory to ensure optimal system performance.

04 为客户提供定期维护服务，延长设备使用寿命。提供详细的操作和维护培训，确保客户能够熟练使用设备。

Provide regular maintenance services to customers to extend the service life of equipment. Provide detailed operation and maintenance training to ensure that customers are proficient in using the equipment.

非标定制案例

NON STANDARD CUSTOMIZATION CASES

分子泵电源
MOLECULAR PUMP POWER SUPPLY

JTDY300-95 I型

JTDY600-2000 II型

■ 安装尺寸 / Installation Dimensions

单位 / Unit : mm

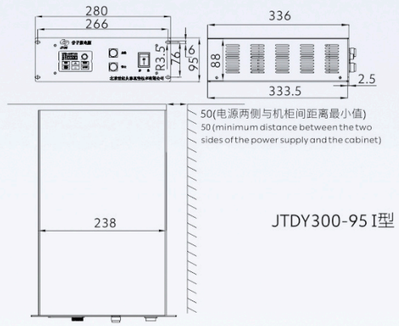

JTDY300-95 I型

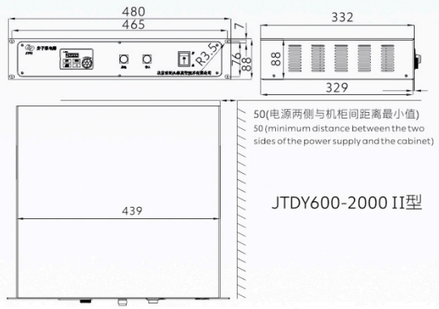

JTDY600-2000 II型

■ 设备简介 / Equipment Introduction

B系列分子泵电源工作状态持久稳定，过载能力强、运行数据准确。具有自动跟踪功能、刹车功能、加速过流、运行过流、减速过压、电源欠压、电源过热、泵过热等保护功能。B系列分子泵电源内置高效率输出变压器，具有超强的过载能力和较低的温升，适应长久持续的运行工作。

The B-series molecular pump power supply has a long-lasting and stable working state, strong overload capacity, and accurate operating data. It has automatic tracking function, braking function, acceleration overcurrent, operation overcurrent, deceleration overvoltage, power undervoltage, power overheating, pump overheating and other protection functions. The B-series molecular pump power supply is equipped with a high-efficiency output transformer, which has strong overload capacity and low temperature rise, and is suitable for long-term and continuous operation.

■技术参数 / Technical Specifications

电源	POWER SUPPLY	单位 / UNIT	B-300Z	B-600 B-1200	B-1600	B-650Z B-1300Z	B-2000Z	B-4200	B-4500
功率	Power	KW	500	1000					
输出电压	Output voltage	V	0-55						
输出频率	Output frequency	Hz	0-550	0-450		0-400		0-250	0-300
输出电缆长度	Output cable length	m	2、5、8 (建议将电源就近安装 / Suggest installing the power supply nearby)						
零启动加速时间	Zero startup acceleration time	min	5	<7	7	6	6	<20	20
减速时间	Deceleration time	min	6.5	<9	9	<9	<9	<22	22
输入电压	Input voltage	V/Hz	180V ~ 240V，50-60Hz						
工作条件	Working conditions		环境温度 Ambient temperature 0-40℃，相对湿度 Relative humidity < 80%						

生产车间
PRODUCTION WORKSHOP

企业资质
Business Qualification

技术专利
Technical Patent

战略合作伙伴
PARTNER

清華大學 Tsinghua University
北京大學 PEKING UNIVERSITY
復旦大學 FUDAN UNIVERSITY
中国科学院大学 University of Chinese Academy of Sciences
武漢大學 WUHAN UNIWERSITY
南京大學 NANJING UNIVERSITY
CHINESE ACADEMY OF ENGINEERING 中国工程院
CETC 中国电科
中国科学院电工研究所
比亚迪汽车
福耀集团 Fuyao GROUP
NAURA 北方华创